YT-6019P-C1 Lens Specification

1.SENSOR SIZE		1/4"
2.OPTICAL TTL	=	12.74±0.2
3.WAVELENGTH	λ=	420-700nm
4.FOCAL LENGTH (EFL)	f=	0.955mm±5%
5.F/NO (INFINITE)	F/NO=	2.0±5%
6.BACK FOCAL LENGTH	BFL=	2.82
7.FLANGE BACK LENGTH	FBL=	1.94±0.2
8.FIELD OF VIEW(D)	=	200°±3°(⌀4.5)
FIELD OF VIEW(H)	=	192°±3°(⌀3.6)
FIELD OF VIEW(V)	=	142°±3°(⌀2.7)
9.TV DISTORTION	=	-19.4%
10.CHIEF RAY ANGLE	=	17.2°
11.RELATIVE ILLUMINATION	=	73%
12.THREAD SIZE		M12P0.5-g6
13.STRUCTURE		1G4P+IR

14.IR FILTER SPEC.(Built-in,Others available)

Tavg>=88% @420-600 nm
T=50% @650±10nm
Tavg<=3% @700-1000 nm
T<5% @1050 nm

匹配芯片	角度		
	D	H	V
ASX340	200°	192°	142°
PV2019K	200°	200°	119°
AR0141	200°	200°	128°
AR0143	200°	200°	152°
ISX016	200°	192°	142°
AR0144	200°	200°	128°
H7640	200°	200°	116°
OV9281	200°	200°	116°

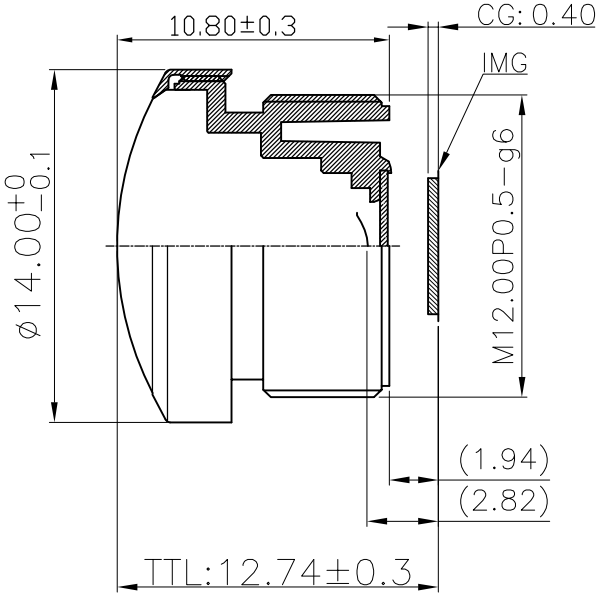

REV	DESCRIPTION	DATE	NAME
①			
②			
③			
④			

NAME	YT-6019P-C1				NAME	DATE
VIEW		REV	00	DRAWN	黄光深	2024.03.18
Wintop Optics				CHECKED		
				APPROVED		