YT-4983P-A2 Lens Specification

1.SENSOR SIZE		1/2.7"(MAXØ7)
2.FOCAL LENGTH (EFL)	f=	3.913mm±5%
3.F/NO (INFINITE)	F/NO=	1.08±5%
4.BACK FOCAL LENGTH	BFL=	6.63mm±0.2mm
5.FLANGE BACK LENGTH	FB=	6.01mm±0.2mm
6.FIELD OF VIEW(D)	=	111°(H3.3)
FIELD OF VIEW(H)	=	92.6°(H2.88)
FIELD OF VIEW(V)	=	48.6°(H1.62)
7.TV DISTORTION	<	-16.8%(H3.3)
8.THREAD SIZE	=	M16*P0.5-6g
9.RELATIVE ILLUMINATION	=	≥40%(H3.5)
10.CRA	=	<11°

11.SpectralTransmission:

436~656nm T ≥85%

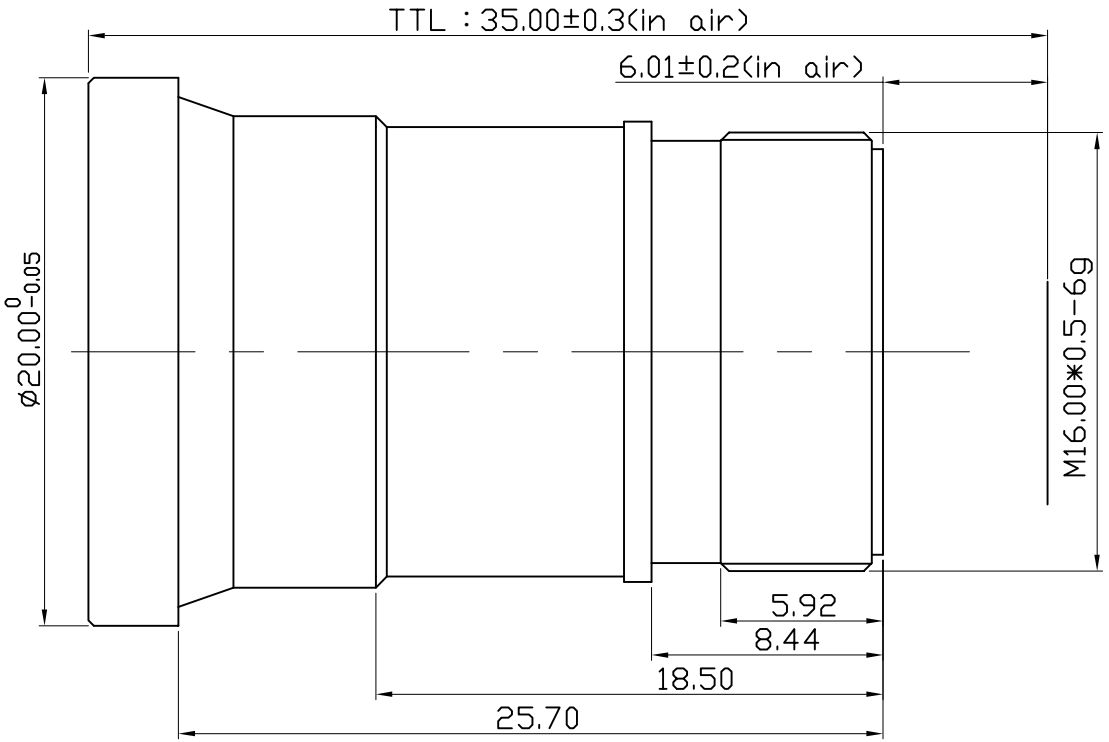

REV	DESCRIPTION	DATE	NAME
①			
②			
③			
④			

NAME	YT-4983P-A2			NAME	DATE
VIEW		REV	00	DRAWN	黄光深	2024.03.16
Wintop Optics				CHECKED		
				APPROVED		